coolpix 950 manual

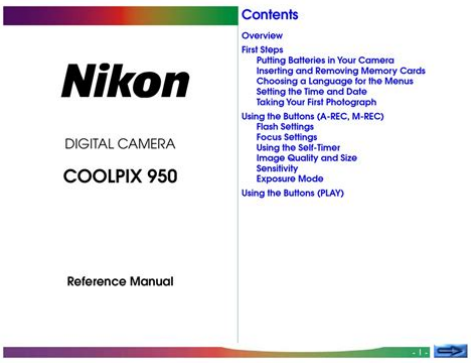

File Name: coolpix 950 manual.pdf
Size: 4427 KB
Type: PDF, ePub, eBook
Category: Book
Uploaded: 29 May 2019, 22:13 PM
Rating: 4.6/5 from 625 votes.

Status: AVAILABLE

Last checked: 13 Minutes ago!

In order to read or download coolpix 950 manual ebook, you need to create a FREE account.

Download Now!

eBook includes PDF, ePub and Kindle version

Register a free 1 month Trial Account.
Download as many books as you like (Personal use)
Cancel the membership at any time if not satisfied.
Join Over 80000 Happy Readers

Book Descriptions:

We have made it easy for you to find a PDF Ebooks without any digging. And by having access to our ebooks online or by storing it on your computer, you have convenient answers with coolpix 950 manual . To get started finding coolpix 950 manual , you are right to find our website which has a comprehensive collection of manuals listed.
Our library is the biggest of these that have literally hundreds of thousands of different products represented.

Book Descriptions:

coolpix 950 manual

Reference Manual You can download the Online Manual content to a computer or smart device in PDF format. SnapBridge Online Help Explains details about using the app for smart devices, " SnapBridge ". Quick Start Guide A manual included with the camera. Explains preparation for shooting and basic operations. Reference Manual You can download the Online Manual content to a computer or smart device in PDF format. SnapBridge Online Help Explains details about using the app for smart devices, " SnapBridge ". Quick Start Guide A manual included with the camera. Explains preparation for shooting and basic operations. Nikon COOLPIX P950 houses a huge 83x 242000mm optical zoom lens is the ideal for capture birds, sports and wildlife. The 5.5stop Dual Detect Optical Vibration Reduction helps minimize the effects of camera shake for crisp results. The 16.1 MP BSI CMOS sensor and EXPEED image processor delivers superb image quality and highspeed continuous shooting up to 7fps. The COOLPIX P950 is capable of 4K 3840x2160 UHD video recording up to 30fps, and 1920x1080p fullHD recording at 60 fps. Other highlights include 3.2inch fully articulating LCD Touch screen, builtin 2.36mdot EVF, RAW photo recording, full manual controls, Time lapse recording and builtin WiFi with Bluetooth. And by having access to our ebooks online or by storing it on your computer, you have convenient answers with Nikon Coolpix 950 Manual. To get started finding Nikon Coolpix 950 Manual, you are right to find our website which has a comprehensive collection of manuals listed. Our library is the biggest of these that have literally hundreds of thousands of different products represented. I get my most wanted eBook Many thanks If there is a survey it only takes 5 minutes, try any survey which works for you. With a zoom this powerful, you can capture distant subjects far beyond the reach of an ordinary camera—from birds and other animals in the wild, to distant landscapes, aircraft and even planets.http://innermiracles.com/5ZNBum1chNDuUWXT.xml

- **coolpix p950 manual, coolpix 950 manual, coolpix 950 manual, coolpix 950 manual, coolpix 950 manual, nikon coolpix 950 manual, nikon coolpix 950 manual pdf.**

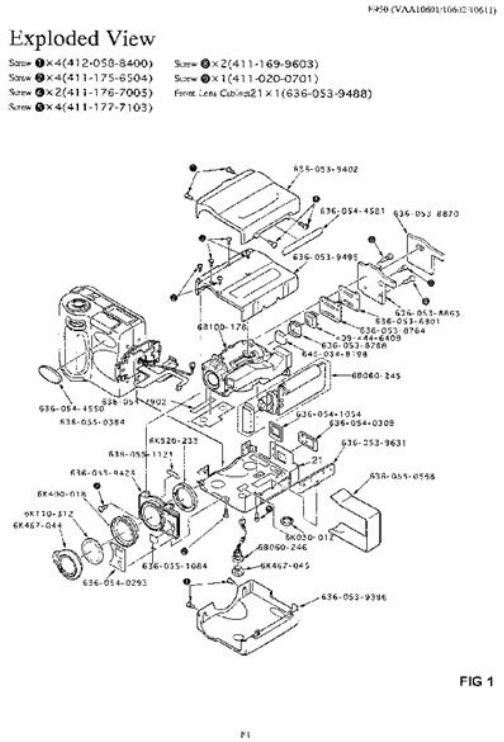

Dynamic Fine Zoom 2, an enhanced digital zoom that effectively doubles the reach to a 4,000mm 1, allowing for even greater zoom potential. The maximum zoom ratio varies by image size. Super portable. The COOLPIX P950 puts the incredible power of a 2,000mm zoom lens into a compact body that weighs just 2 lb. 3.5 oz. This combination of portability and supertelephoto performance is incredible, giving photographers the freedom to take their creativity to exciting new places. Dual Detect Optical VR for reliable supertelephoto stabilization. Image blur can be a major issue, especially with distant subjects and supertelephoto shooting. Thanks to its Dual Detect Optical VR Vibration Reduction, the COOLPIX P950 effectively reduces image blur caused by camera shake for sharp images of distant subjects even when shooting handheld. In NORMAL mode, images are stabilized with an equivalent of shooting at a shutter speed 5.5 stops faster 1, the maximum in the history of Nikon compact digital cameras 2. 1 Based on CIPA Standards, measured at approx. 350mm 35mm format equivalent. 2 As of January, 2020. Superior optical performance for high image quality. The COOLPIX P950's advanced optical system features a Super ED glass element used in Nikon's heralded DSLR lenses, which provides higher imageforming capability and effectively reduces chromatic aberration, dynamically achieving superior image quality with supertelephoto shooting. The backsideilluminated CMOS image sensor, with 16.0 effective megapixels and sensitivity up to 6400 ISO, enables the capture of clear, sharp images even in dark shooting situations. Faster AF speed and increased buffer capacity for lagfree shooting. With the COOLPIX P950, you don't have to wait for image data to write to the memory card before your next shot. After two periods of continuous shooting, the next burst of continuous shooting can be started faster than with the P900 even though the number of frames is decreased. Cinematic 4K UHD movies.http://kuzfarm.ru/images/fiat-palio-weekend-service-manual.xml

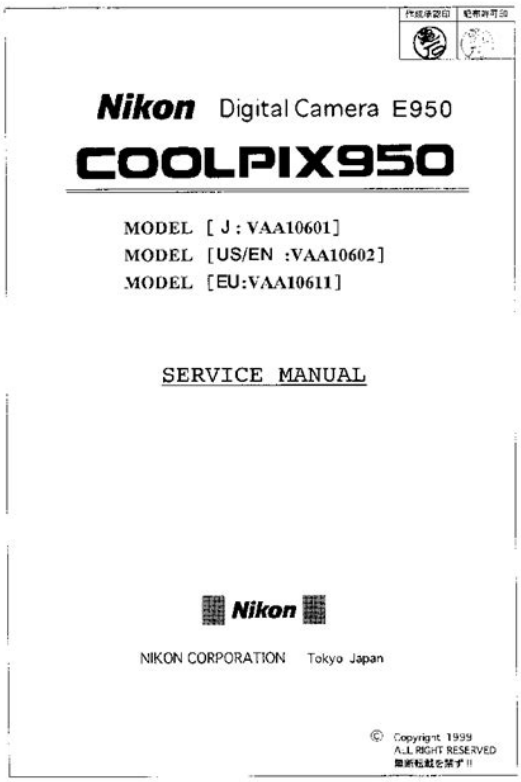

Nikon Digital Camera E950

COOLPIX950

MODEL [J : VAA10601]
MODEL [US/EN :VAA10602]
MODEL [EU:VAA10611]

SERVICE MANUAL

Nikon

NIKON CORPORATION Tokyo Japan

© Copyright 1999
ALL RIGHT RESERVED

In Movie manual mode, you can completely control exposure and aperture settings for footage that looks just how you intended. AE can also be locked, even when ambient brightness changes significantly during movie recording. You can even choose the zoom speed during video recording by selecting one of three options with the side zoom control. Watch 4K Sample Video View in a new window RAW NRW for stills. With RAW NRW file format support, fullresolution still images can be saved that contain all the setting information from the time of the shot, allowing postcapture image editing of white balance, exposure and COOLPIX Picture Controls without affecting the original. Timelapse movies made easy. Dynamic timelapse movies of landscapes and more can be automatically created from a series of still images captured in interval timer shooting. Just select one of five scene mode options and the most appropriate interval is automatically set. Watch now View in a new window Flexible long exposure options. Bulb and Time settings have been added to the COOLPIX P950's shutter speed options to further customize the look of long exposure images, handy for taking pictures of fireworks, night landscapes, stars, or car light trails. The maximum exposure time for both the Bulb and Time settings is 60 seconds, with ISO sensitivity available up to 1600. Flip out the Variangle LCD to creatively compose photos and videos from unique perspectives—overhead, down low or just comfortably in front of you. Bring the COOLPIX P950 up to your eye and the display automatically switches to the EVF for a beautiful and accurate highresolution view. Control at your fingertips. The Focusmode selector makes switching between MF and AF easy. In addition to the Snapback zoom and Side zoom controls, the Side dial is conveniently located to control shooting settings. In MF mode, the dial is used to focus manually.

When set to AF, it can be assigned to control exposure compensation, white balance or ISO sensitivity. For advanced shooters, a PSAM mode dial is available right on top of the camera, much like a DSLR. Select the COOLPIX P950s aperture and shutter speed to control your shots exactly as you want them. But you dont have to understand exposure controls to get great results—the COOLPIX P950 can do all that work for you. Capabilityexpanding accessory options. An accessory terminal and accessory shoe let you expand the camera's functionality with optional accessories like the DFM1 Dot Sight, which helps keep track of small, distant subjects like birds and aircraft during

supertelephoto shooting. Additionally, various accessories like flashes, microphones and more can be used to extend the capabilities of the COOLPIX P950 even further. Bring excitement closer with Birdwatching and Moon modes. Birdwatching mode and Moon mode are independent of Scene Modes, and can be selected right from the Mode Dial. When taking shots of wild birds or the moon, these modes help you get great results without any complicated setting changes. Share your amazing supertelephoto shots easily with the SnapBridge App. Images taken with the COOLPIX P950's supertelephoto zoom look so amazing, you'll probably want to share them right away. SnapBridge lets you do just that. Images are seamlessly transferred to your compatible smart device as you take them—ready to impress your followers on social media. Technology VR image stabilization A Nikon technology that improves image stability by automatically compensating for camera shake. ISO 6400 Maximum high ISO available on the camera is 6400 ISO. CMOS Complementary metaloxide semiconductor, one of the two main types of image sensors used in digital cameras. The Nikon COOLPIX CMOS image sensor with a backside illumination structure increases the amount of light that each pixel receives.

http://www.diamondsinthemaking.com/content/boss-gl-100-manual

The resulting improvement in noise and sensitivity reduction makes the select COOLPIX cameras more capable when shooting night scenes or in dark indoor situations. Target Finding AF Select COOLPIX digital cameras utilize the Target Finding AF feature which instantaneously assesses the intended subject and automatically adjusts the AF area according to its size to assure clearly focused images. Subject Tracking COOLPIX cameras and select DSLRs in Live View mode, maintain focus on a moving subject using a contrast detection system, which is based on the principle that objects in a scene that are in focus display the highest contrast. WiFi Refers to wireless technology and wireless communication. In photography, its most commonly the wireless transmission of images directly from a camera to a computer in order to achieve a swifter workflow. The Nikon SnapBridge application must be installed on the device before it can be used with this camera. Updating to Version 2.7 Images downloaded to the smart device with version 1.x will no longer be displayed in the Gallery after you upgrade to version 2, but can be viewed in the "Photos" app provided with the smart device. Make sure your cameras firmware is updated to the current. There is no guarantee this app will run on all devices. For compatibility and to download the application, please visit Download the SnapBridge app on the App Store Download the SnapBridge app on Google Play Apple, the Apple logo, iPhone and iPad are trademarks of Apple Inc., registered in the U.S. and other countries. App Store is a service mark of Apple Inc. Android and Google Play are trademarks of Google Inc. All Nikon trademarks are trademarks of Nikon Corporation. Dynamic Fine Zoom magnification is calculated from the fullwide end of optical zoom.LCD, Video and Photo Gallery images are for illustrative purposes only. Battery life may vary depending on shooting interval and length of time menus and images are displayed.

http://precisionheavyhaul.com/images/89-volkswagen-fox-repair-manual.pdf

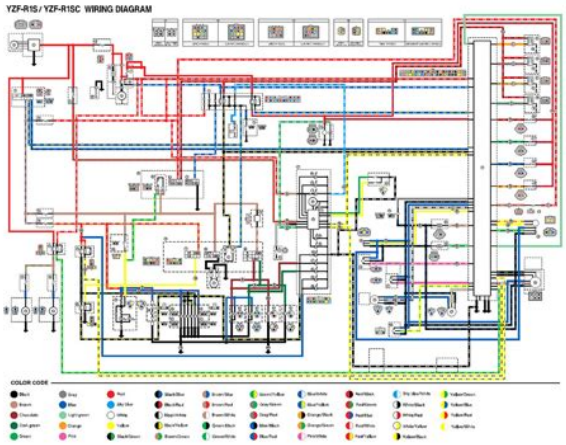

Please try again in a few minutes. Please try again in a few minutes. Please try again in a few minutes. Please try again in a few minutes. Please try again in a few minutes. Please try again in a few minutes. Please try again in a few minutes. Please try again in a few minutes. Please try again in a few minutes. Please try again in a few minutes. Please try again in a few minutes. Please try again in a few minutes. Please try again in a few minutes. Please try again in a few minutes. This product is backordered. Order now and we will ship when stock becomes available. Please try again in a few minutes. Please try again in a few minutes. Please try again in a few minutes. Please try again in a few minutes. Please try again in a few minutes. Please try again in a few minutes. Support Product Registration Registering your Nikon product allows us to send you with your permission important updates, service information and helpful hints, and it makes it easier should you ever need to call in for help. Register your product online now. View in a new window Nikon Answers Site We store all resolved problems in our solution database. If you can’t find a relevant answer, feel free to submit a question to our technical support team.Your Information First Name required Last Name required Email required Country required United States Brazil Canada English Canada French Latin America Mexico Other By clicking Sign Up, you are opting to receive promotional, educational, ecommerce and product registration emails from Nikon Inc. You can update your preferences or unsubscribe any time. This problem has been solved. Be the first to write one! It includes updates to Panasonics DFD autofocus system, creative photo modes, and video features that come close to matching the more expensive S1H. 248 Nikon Z5 initial review review Sep 1, 2020 at 1300 Nikons new entrylevel mirrorless fullframer feels anything but entrylevel.

http://gulzarihacegandergisi.com/images/89-vtr250-manual.pdf

And it may well be the model best positioned to convert remaining Fmount holdouts to Zmount. 1193 Canon EOS R6 Review not the hybrid king, but a great photographers camera review Aug 26, 2020 at 1440 The Canon EOS R6 doesnt quite live up to the full promise of its doeverything specs, but its a great photographers camera. 1221 Sony a9 II review review Aug 19, 2020 at 1300 The Sony a9 II didnt make a huge splash in the industry when it launched, but its certainly left an impression on us. Read our full review to see why its got the best autofocus system weve ever seen. 747 Olympus OMD EM10 Mark IV initial review first impressions Aug 4, 2020 at 0600 The Olympus OMD EM10 IV is the companys entrylevel DSLRshaped mirrorless camera. While it has a higher resolution sensor and new processor, its biggest focus is on selfies. Weve selected our favorite lenses for Sony mirrorlses cameras in several categories to make your decisions easier. The best camera bargains of 2020 Aug 13, 2020 at 2158 If youre looking for a highquality camera, you dont need to spend a ton of cash, nor do you need to buy the latest and greatest new product on the market. In our latest buying guide weve selected some cameras that might be a bit older but still offer a lot of bang for the buck. These midrange cameras should have capable autofocus systems, lots of direct controls and the latest sensors offering great image quality. Best cameras for sports and action Aug 11, 2020 at 0146 Whats the best camera for shooting sports and action. Fast continuous shooting, reliable autofocus and great battery life are just three of the most important factors. In this buying guide weve roundedup several great cameras for shooting sports and action, and recommended the best.Sep 3, 2020 0 Microsoft unveils a new AIpowered tool for spotting deepfaked images and videos The tool was announced as part of Microsofts effort to help prevent election interference in the form of digital manipulation.

Sep 3, 2020 8 Skylum announces LuminarAI, an AIpowered app designed to change how you edit photos Skylum Software has unveiled the newest version of Luminar. LuminarAI has been designed around the idea of using artificial intelligence to simplify as much of the photo editing process as possible without removing the creative control of the user. The Panasonic S5 includes important upgrades to its autofocus system, but how much do those improvements extend to video. We put it to the test, shooting sidebyside against the S1H, to find out. Read on for all the details. Sep 3, 2020 183 lens news Fujifilm XF 50mm F1.0 preproduction sample gallery At long last, Fujifilms XF 50mm

F1.0 R WR lens has landed. Weve been shooting around with a preproduction copy to see just how magical that F1.0 aperture looks on Fujifilms latest cameras. Sep 3, 2020 75 sample gallery ZTE reveals the Axon 20 5G, the first smartphone with selfie camera hidden under the display The handsets front camera is a true novelty, but whether it will prove worthwhile is yet to be seen. Sep 2, 2020 53 mobile The LomoGraflok 4x5 Instant Back lets you capture Instax Wide images with large format cameras The LomoGraflok 4x5 Instant Back makes it so Braflokequipped 4x5 cameras can capture proofs with Instax Wide instant film — a welcomed option considering peelapart film was discontinued back in 2016. Sep 2, 2020 41 Handson with the Panasonic Lumix S5 The Panasonic Lumix DCS5 is a smaller, more affordable addition to the line of fullframe mirrorless cameras. Its video spec is similar to that of the S1 with VLog upgrade, its autofocus particularly for stills is improved, but its both smaller and less expensive than the S1. Sep 2, 2020 70 Panasonic Lumix DCS5 initial review The Panasonic Lumix DCS5 is a fullframe mirrorless camera but in a body smaller than the Micro Four Thirds GH5.

http://counterreaction.net/wp-content/plugins/formcraft/file-upload/server/content/files/16285d5b2b9366---C1060-plus-manual.pdf

It includes updates to Panasonics DFD autofocus system, creative photo modes, and video features that come close to matching the more expensive S1H. Sep 2, 2020 406 first impressions DPReview TV Panasonic Lumix S5 first impressions Chris and Jordan take a look at the Panasonic S5 and in short, they find an appealing, highly versatile tool for still photographers and videographers alike. Sep 2, 2020 41 video Panasonic Lumix S5 sample gallery Panasonics latest S5 mirrorless camera comes with the companys latest JPEG engine and a proven sensor that combine for some fantastic image quality. Sep 2, 2020 30 sample gallery Panasonic firmware brings 5K recording to S1R, updated autofocus to S1, S1R, S1H Hot on the heels of the S5 announcement, Panasonic has promised to release firmware by the end of 2020 that will bring the autofocus of its existing Sseries cameras up to the standards of the newer model, and as a nice bonus, gives the S1R the ability to record 5K video. Sep 2, 2020 12 Panasonic unveils new 24, 35, 50 and 85mm F1.8 Lmount primes In addition to its camera announcement today, Panasonic also revealed that a handful of new Lmount F1.8 prime lenses are on the way. Sep 2, 2020 59 camera news Video A look at Yasuharas unique Nanoha macro lens with builtin LEDs This unusual macro lens has a little bit of everything — built in LEDs, a USB port for charging the internal battery and a maximum 5x magnification rate. Sep 1, 2020 60 video Sony announces new Amount to Emount lens adapter with builtin screw drive support The new adapter adds full autofocus support to Amount lenses with nine of Sonys most popular Emount camera systems and features an integrated motor for driving nonmotorized screwdrive Amount lenses with the a7R IV and a6600. And it may well be the model best positioned to convert remaining Fmount holdouts to Zmount.

Sep 1, 2020 248 review Google Images launches Licensable badge, making it easier for users to identify creators and license images Google, in collaboration with Shutterstock, has announced the launch of the Licensable badge on qualifying images in Google Images search results. The new badge will provide Google Images users quick access to creator and licensing information and then provide a link to the appropriate websites to license selected images. Aug 31, 2020 124 lens news Understanding Olympus OMD EM1 Mark III and EM1X High Res Shot modes Among many of the technologies that Olympus has introduced, its tripod and handheld high res shot modes are among the most useful. Click through for a more detailed look at what these modes do, and when you should take advantage of them. Aug 31, 2020 Sponsored Video What its like to photograph Formula 1 in 60 seconds MercedesAMG Petronas F1 Team photographer Steve Etherington has photographed every F1 race for the past 28 years. This 60second BTS video shows what its like to keep his record going amidst a pandemic. Aug 30, 2020 133 video Best lenses for Sony mirrorless buying guide updated Weve given our lens buying guide for Sony mirrorless cameras a refresh, with

new picks for a number of use cases. Aug 30, 2020 Check out the Raws Canon EOS R5 sample gallery update Now that we have Raw support for the Canon EOS R5, weve decided to dig a little deeper into its files and see just what that new 45MP sensor can do. Aug 29, 2020 210 sample gallery Xiaomi introduces 3rdgen underdisplay camera, promising unparalleled performance Xiaomi has introduced the third generation of its underdisplay camera technology. This new tech disguises the camera more effectively than prior first and second generation attempts at an under the display frontfacing camera. Aug 28, 2020 45 video Tips or suggestions. Special Free Shipping for IR Readers. Click Here !

Their previous CoolPix 900 was one of theNow, Nikon has developed theThe CoolPix 950 will be immediately recognizable to readers familiar with theThe CoolPixThe lens is an opticalThe camera includes both an internalBoth macro and lowlight capabilities of the new CoolPix are truly exceptional,Measuring just 5.6LCD display for sharp, highquality previews of digitally captured images. Basic 116. File sizes range from 640 x 480 pixels VGA, to 1,024 x 768 XGAThe camera is shipped with a Nikon 8MB Removable. CompactFlash card, which holds up to 32 Basic JPEG images. However, the 950Dial settings. This portion of the camera can be turned to four differentFocus from 4 inches to infinity. Focal range in normal mode is 12 inches toISO 80 default to 100, 160, and 320. A selection of exposure modes increaseThey include Programmed Auto ExposureShutter priority allows selection of shutter times in onestop increments from. Matrix, Spot, and Centerweighted metering. In our tests, the 950 deliveredIncandescent, Fluorescent, and Flash lighting conditions. A White Preset optionThe 950 also provides five userselectable. Image Tone Curves to adjust image appearance for printing or monitor display.The 950 also permits custom titling and renaming ofThis function automatically records 10 frames of each exposure and then selectsThis sophisticated image analysis technology, which Nikon calls antijitterRAM buffer. Highspeed continuous shooting of up to 1.5 frames per second orFR6 Lithium batteries. An optional AC adapter is also available. The cameraPictureWorks Hotshots, and Interactive Pictures IPIX.

ecame accustomed to the camera though, we hadThe LCD display screen is quite sharp, both due to its 130,000 pixelsIf you dont want your viewfinder clutteredAt the same time, aLCD data readout, meaning that youll very likely be able to operate the cameraThis bodes well for batteryThe lens is glass as opposed to plastic, composedIn additionWe suspect thatThis behavior can be changedAs with most things in life, this is a tradeoff TheThe lens in the CoolPix 950 uses a threeposition electromechanical apertureSome readers have pointed out the barrel distortion of the 950s lensWe characterized this distortionBecause most strongly affectsIf youre doing architectural photography, it couldThe formula well be using is totalUsing this measurement standard, the geometric distortionThe photographic world uses aWe hope to postOn the Macro front, we initially were fooled by the minimum manual focusEven at this distance, the macro performance wasA little experimentation in the studioThe best macro performance is therefore achieved withAt this close approach,Combined withExposure controls includeMetering modes include spot, centerweightedShutter speeds range from anThe CoolPix 950s ISO light sensitivity rating is adjustable, eitherThis rather cryptic specification calls for a little explanation With any electricalEvidently wanting to establish a conservativeISO of 80, and point out that theyre just increasing the amplifier gain forWe applaud both this conservative rating approach, asThe 950s contrastdetect autofocus also runs out of usable signal somewhereInterestingly though, this probably worked to our advantage in the outdoor testMetering modes also includeExposure may be determined eitherGiven the way the lens apertureThus, in shutterpriorityThe camera willTwo notes The slowsync mode for theWith regard to exposurefeedbackThis in fact isnt true, a small sensor next to the lens on the face of theThis has both positives andThis can be a useful trick for difficult exposure situations.

The downside ofCoolPix 950 has a range of whitebalance settings, including auto, sunny,

incandescent,This can be convenientThis implies you may be able to leaveThere are three such modes, including. Continuous shooting mode captures frames rapidly, at whatever resolution andFinal production models willFinally, VGA Sequence captures a sequence of VGAresolution frames well, duhh,This boostsThis is a much more sophisticatedThe CoolPix 950 promises to provide not only this, but a contrast adjustmentWe all know we should use a tripod when workingThat image and only that one is saved toPresumably, the AE system would choose evenA small thing, but a niceThis time is to allow the autofocus and autoexposureWindows utility developed by Digital. Eyes. We measured the 950s shutter lag at 0.8 seconds with full autofocus,In macro mode, focusingMacro focus takes a variable amount of time, dependingStartup time is also veryAnother area in which the CoolPixThe rough version is enoughThe result is that you can move throughThus, we dont have exact timesThis represents a huge improvementExposure compensation, autoexposureWe found this to be a particularly effectiveThese control,Each of these buttons are used in conjunctionFinally, the. With this button held down, the camera will cycle through all combinations ofEven thoughLCD displays a small window into the full frame, which moves between 9 fixedIf you press and hold it while rotating the selectorThis strikes us as a huge benefit,Operating Modes, Menus, Etc. Time for our usual exhaustive exhausting rundown of the CoolPixWeve covered the basics above,All other functions operate normally though, includingYou also still get a shutterspeed and lensaperture readout in the LCD displayTopPanel Controls We covered these briefly above, but will enumerate their functions againPress and hold while turning the selector wheel toNo playmode function.

In play mode, stepCycles through threePress in play modeIn manual record mode, press immediately after image capture to eraseUnknown momentary functionFor clarity though, well list all functions of both modes here separately,Record Mode Menu We made 5, which expanded the folder submenu onto a second screen, whereWhen a folder is selected,A playbackmode option does allowAs noted earlier though, evenBal White balance setting. This submenu provides no less than sevenThe camera will read the RGB values from the knownSubmenu selects betweenNikon tells us it uses a brightness histogram internally, to adjust midtoneOptions include brightnessPhenomenally useful feature,Submenu options are auto digitalLCD Monitor may be on or off at startup, and may or may not provide a momentaryAutofocus may be set to operateThis option keeps it incrementingOptions are German, English, French, and Japanese. Screen Up Screen These functions largely mirror those of the autorecord mode menus. Options are German, English, French, and Japanese. We suspect that most owners will almost immediatelyAs shown in the imageWhile this might not be an issueAlso, along with everybody else, we need to complain a bit about the flimsyWrapping things up, the 950 includes several more subtle niceties thatAll images that would normally appear on the. LCD are also routed to the external video display. Including all camera operatingFrom past experience, weve often found early prototypes of cameras to consumeOn a positive note, the abilityBecause the LCDNote that in theThe power drain with the lowervoltage internal battery supply would be higher,Mode Drain Theres a basic imagetransferOther packagesTest Results In keeping with our standard policy, our comments here are ratherOverall, we were extremely impressed with the image quality from the.

CoolPix 950 Exposure was consistently accurate, with bright, clean colors,This approach produces images with maximum detail,Personally, we prefer this methodology,Others prefer to let the camera trade away some ofWith the 950, Nikon appears to have arrived at an excellentOnce we became accustomed to the camera though, we hadWe added a new lowlight test with the CoolPix 950, and its performance inPage for full details on lowlight performance. The CoolPix 950 really shone in the Macro test, capturing a minisculeThe camerasNikon also made major stridesLCD menu system. All in all, the Coolpix 950 represents a significant advanceShort Course in Nikon CoolPix 950 Photography.The book covers a tremendous range of shooting techniques and generalHighly recommended! Do you have a CoolPix 950 camera. If youll post an album of yourNoes Sample CoolPix 950 Fireworks Images Where are yoursSteyskals Sample Images Lots of really great

pictures. If you likeHe also has pictures for the CoolPix 990Sample Pictures Album If youre into whitewater rafting, this is thePictures Page Dealer Locator page to find a dealer near you! Digital Cameras Page. Based on the following U.S.It is a solu tion that has proven valuable for many markets, including real estate, travel, publishing, educContact Internet Pictures on the World Wide Web at for guides for camera models not listed here. The iPIX Picturetaking Process This iPIX Photography guide explains how to set up your camera and tThe exact steps may vary. Please refer to your iPIX User Manual for detailed instructions. Windows Installation This procedure will walk you through installing the iPIX software on your computer. 1. Insert the iPIX CD into your CDROM drive. The Setup program should start automatically. If the program does not start, click on the StarThis step is optional. Windows Installation 1. Turn on your computer and place the iPIX CD in your CDROM drive. The setup screen should start automatically. 2.

https://www.informaquiz.it/petrgenis1604790/status/flotaganis22052022-1318